REVISION RECORD				
REV	ECO	DESCRIPTION	DRFT	CHKD

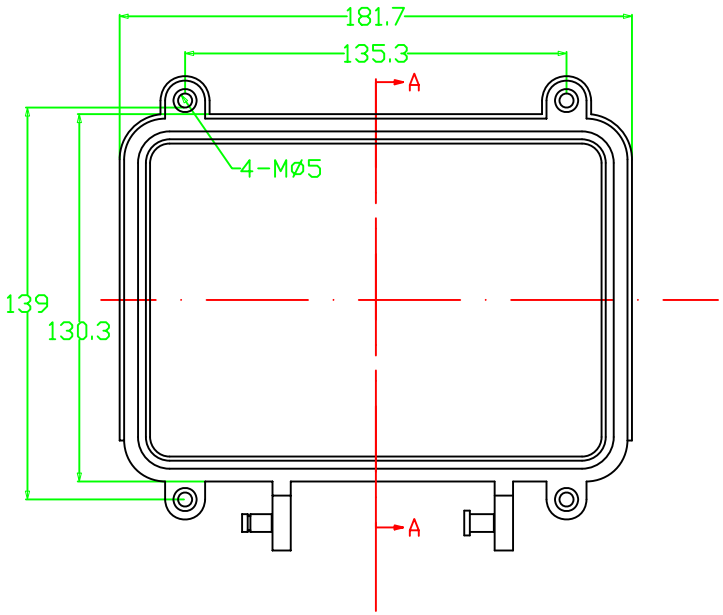

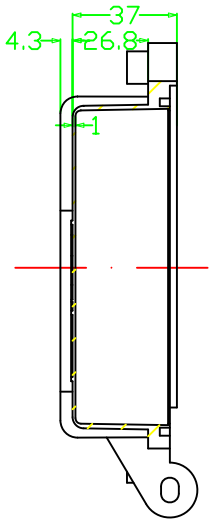

剖面
A-A

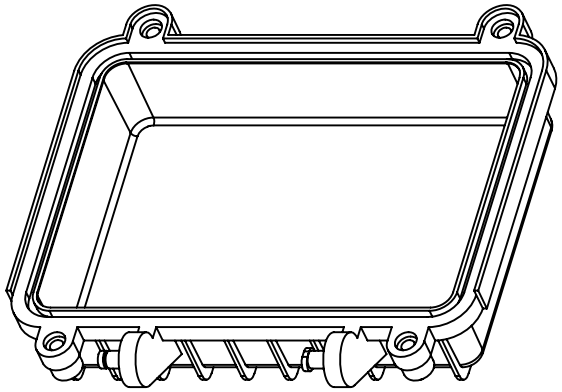

DETACHED LISTS

MM (INCH)

TOLERANCES EXCEPT AS NOTED

MM	
.0 ± 0.3	±
.00 ± 0.2	±
.000 ± 0.1	±

ANGLES ± 5°

FIRST ANGLE PROJECTION

DFTD	DATE
CHKD	DATE
MFD	DATE
APPVL	DATE

MATERIAL : AL

QT'Y :

FINISH:

SCALE : 1:3

埃弗勒斯 EVEREST

EVEREST

WWW.EVERESTCASE.COM

TITLE

AAP003-S

DRAWING NO. AAP003-S

/PART NO. 00

SIZE A4

REV

DO NOT SCALE DRAWING

SHEET 1 OF 1

REVISION RECORD				
REV	ECO	DESCRIPTION	DRFT	CHKD

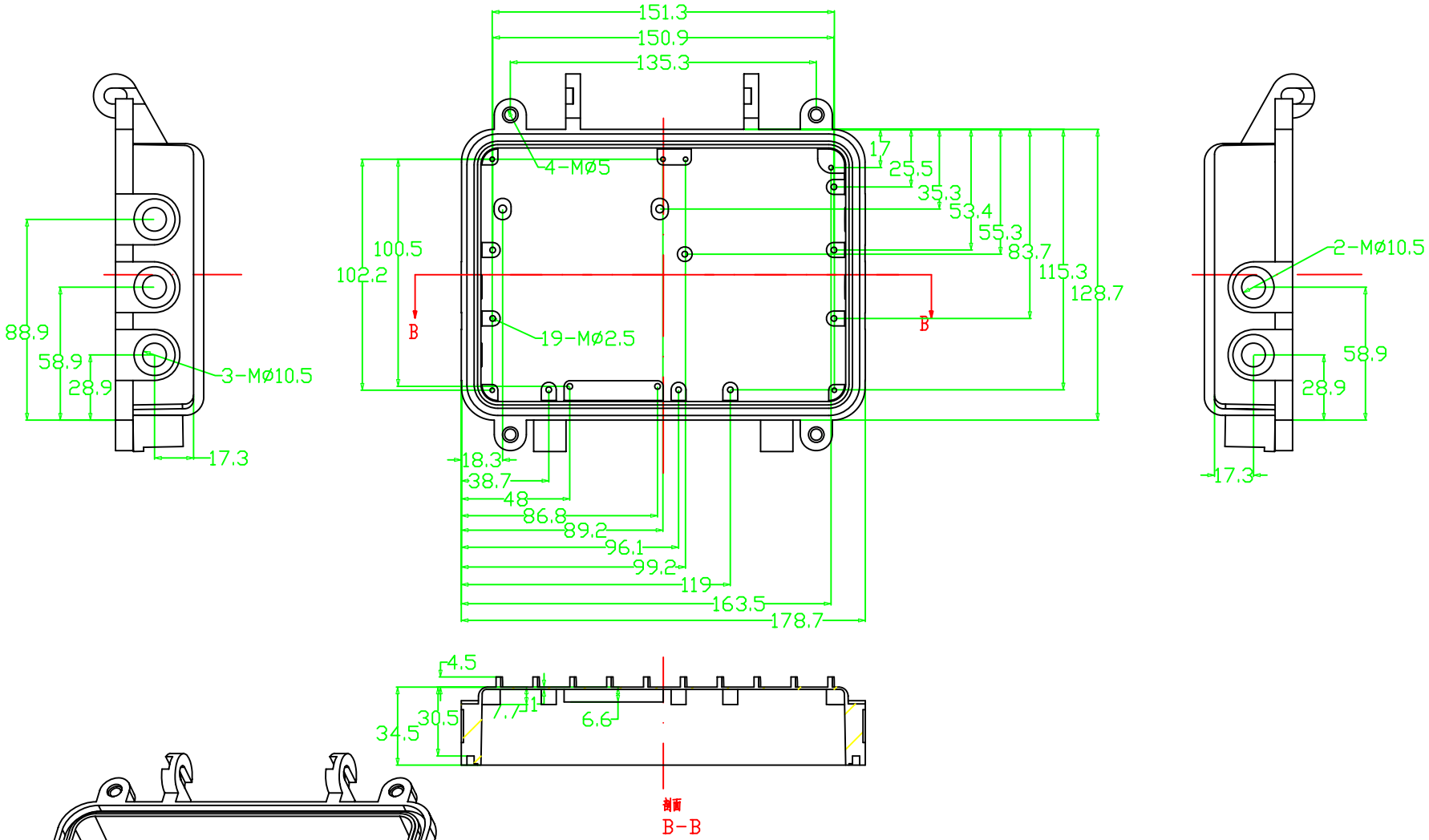

DETACHED LISTS	MM (INCH) TOLERANCES EXCEPT AS NOTED: MM .0 ± 0.3 ± .00 ± 0.2 ± .000 ± 0.1 ± ANGLES ± 5° FIRST ANGLE PROJECTION	DFTD DATE / CHKD DATE / MFD DATE / APPVL DATE / MATERIAL : AL / QT'Y : / FINISH: / SCALE : 1:3	埃弗勒斯 EVEREST — EVEREST WWW.EVEREST CASE.COM / TITLE AAP003-X / DRAWING NO. AAP003-X / PART NO. 00 / SIZE A4 / REV / DO NOT SCALE DRAWING / SHEET 1 OF 1