REVISION RECORD				
REV	ECO	DESCRIPTION	DRFT	CHKD

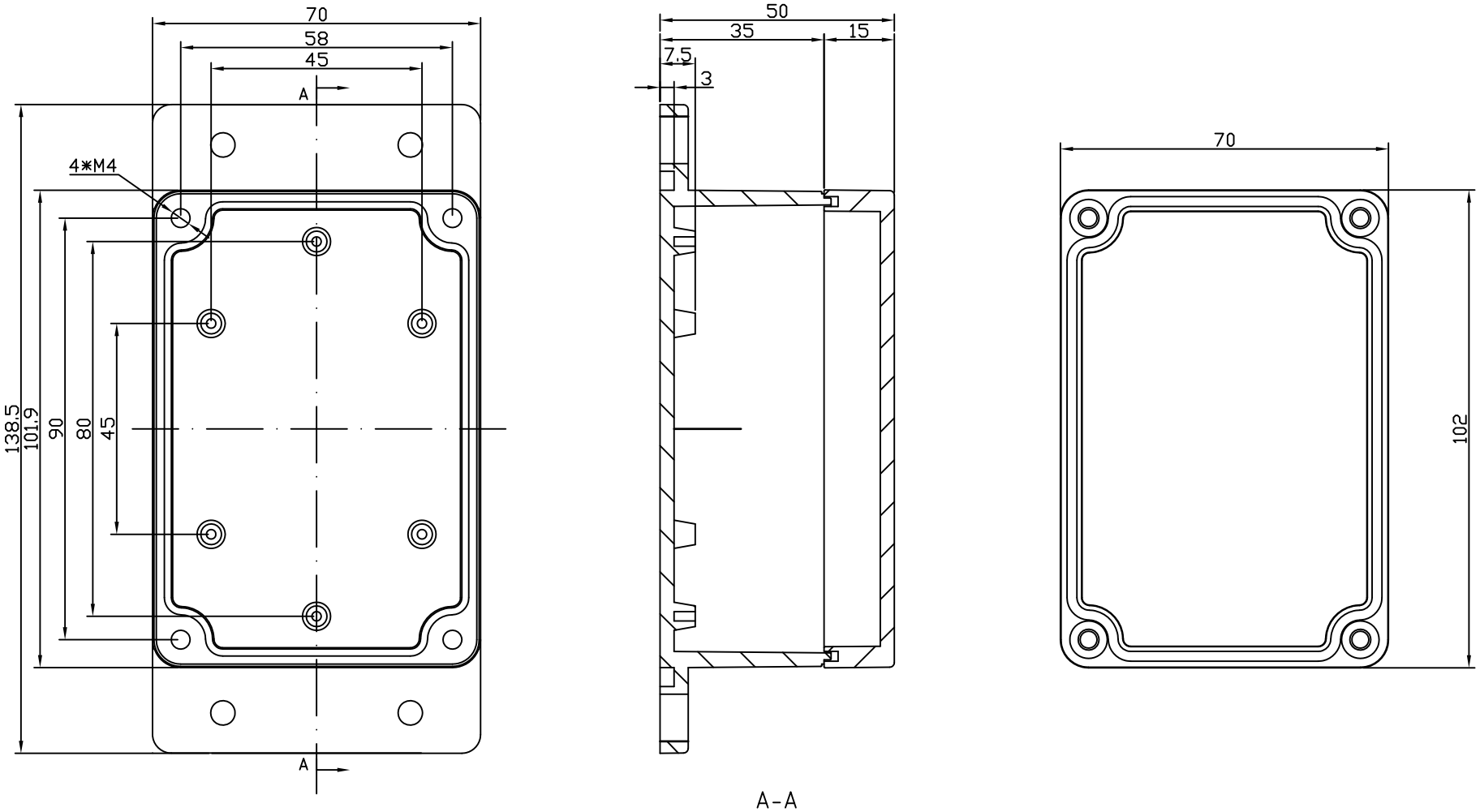

MM (INCH)	DFTD	DATE	E:\EE\new logo.jpg
TOLERANCES EXCEPT AS NOTED	CHKD	DATE	
MM .0 ± 0.3 ±	MFD	DATE	
.00 ± 0.2 ±	APPVL	DATE	
.000 ± 0.1 ±	MATERIAL : ABS		
ANGLES ± 5°	QT'Y :		
FIRST ANGLE PROJECTION	FINISH:		
DETACHED LISTS	SCALE : 1:1		

EVEREST
WWW.EVEREST CASE.COM

TITLE
PW027

DRAWING NO. PW027
/PART NO. 00

SIZE A4 REV

DO NOT SCALE DRAWING

SHEET 1 OF 1