REVISION RECORD				
REV	ECO	DESCRIPTION	DRFT	CHKD

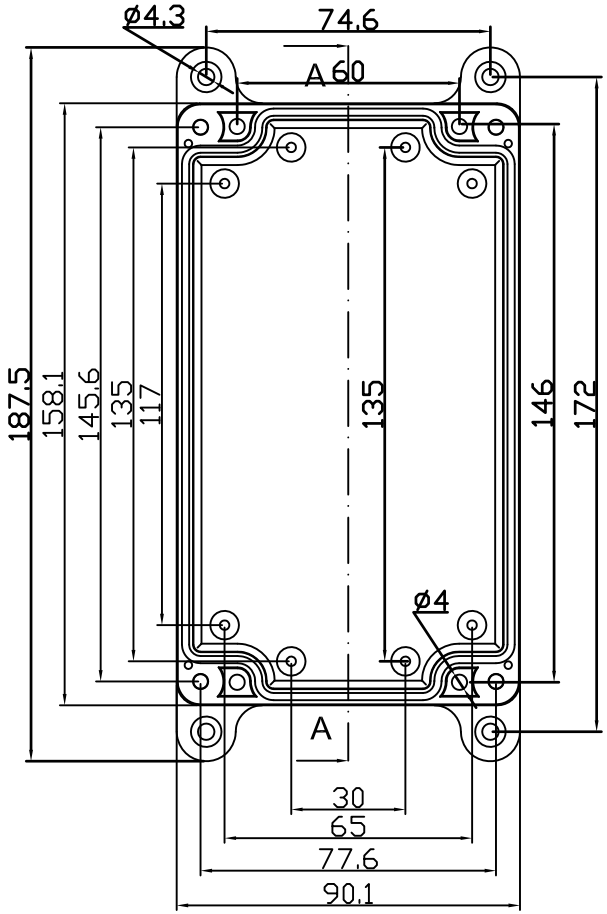

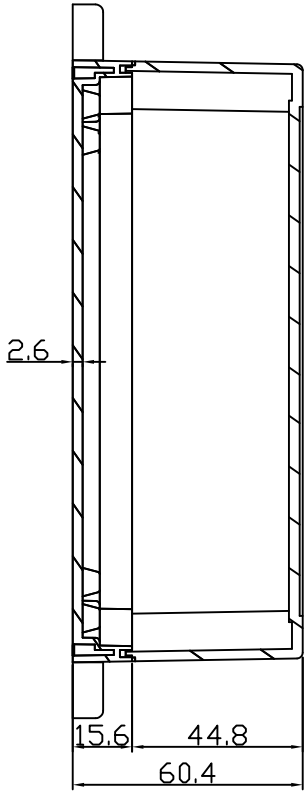

A-A

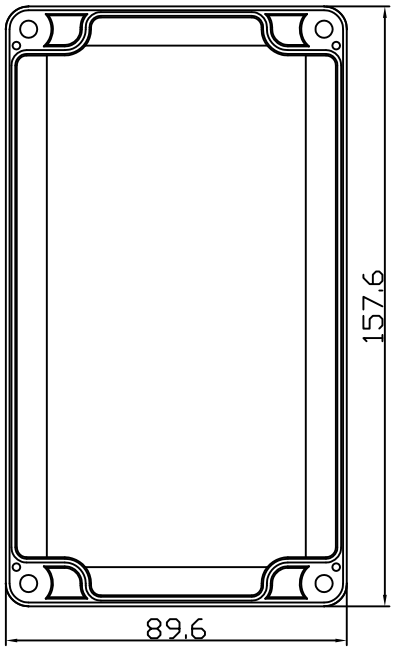

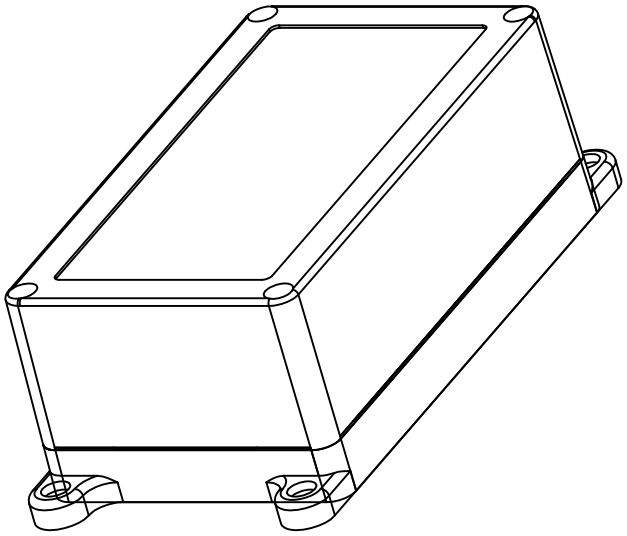

DETACHED LISTS

MM (INCH)

TOLERANCES EXCEPT AS NOTED

MM	
.0 ± 0.3	±
.00 ± 0.2	±
.000 ± 0.1	±

ANGLES ± 5°

FIRST ANGLE PROJECTION

	NAME	DATE
DRAWN	Kelvin	01/15/2015
CHECKED		
ENG APPR.		

MATERIAL : ABS

QT'Y :

FINISH:

SCALE : 1:1

E:\new logo.jpg

EVEREST
WWW.EVEREST CASE.COM

TITLE
PW086

DRAWING NO. PW086
/PART NO. 00

SIZE A4

REV

DO NOT SCALE DRAWING

SHEET 1 OF 1